Dataeagle DE3xxx Diagnostic Terminal

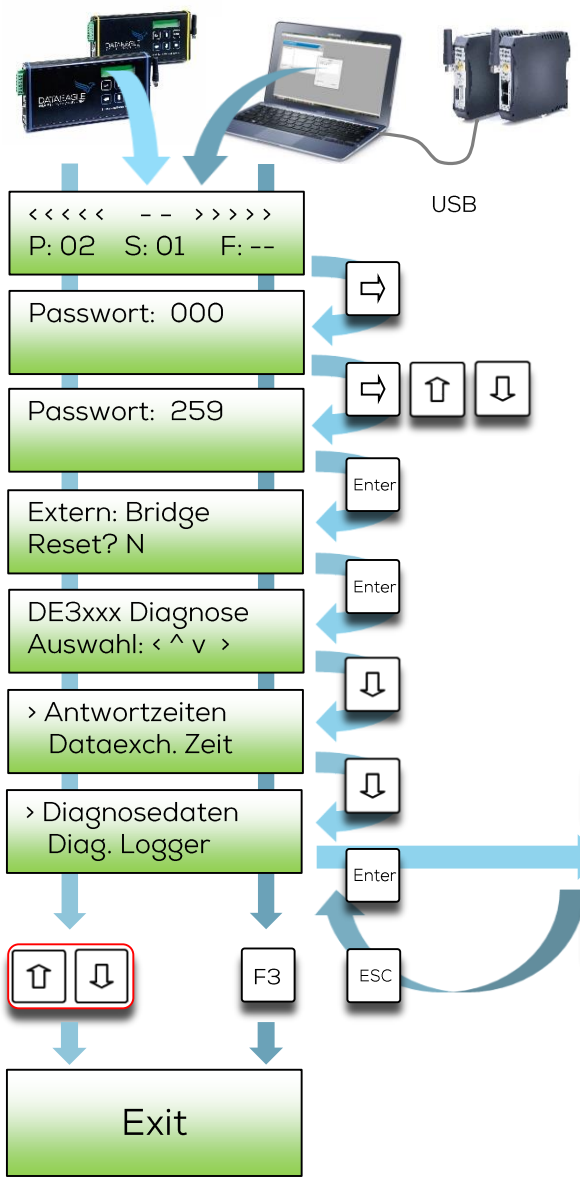

„Dataeagle classic" display or
„Dataeagle Wizard" terminal

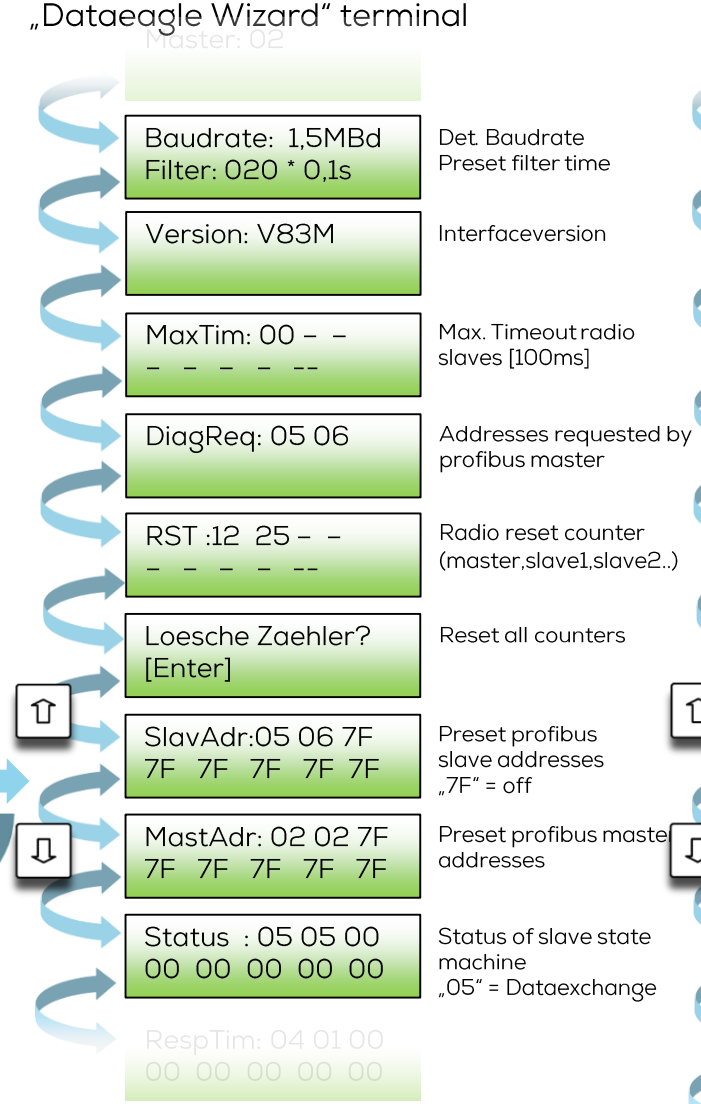
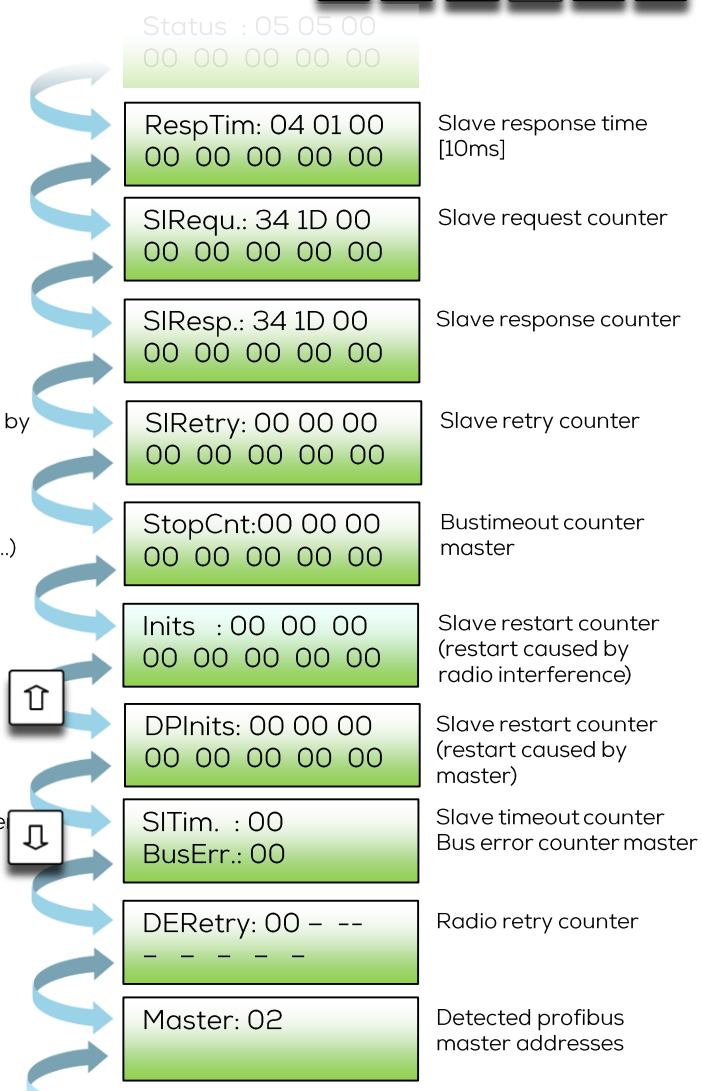
Keypress: