Dataeagle DE4xxx Diagnostic Terminal

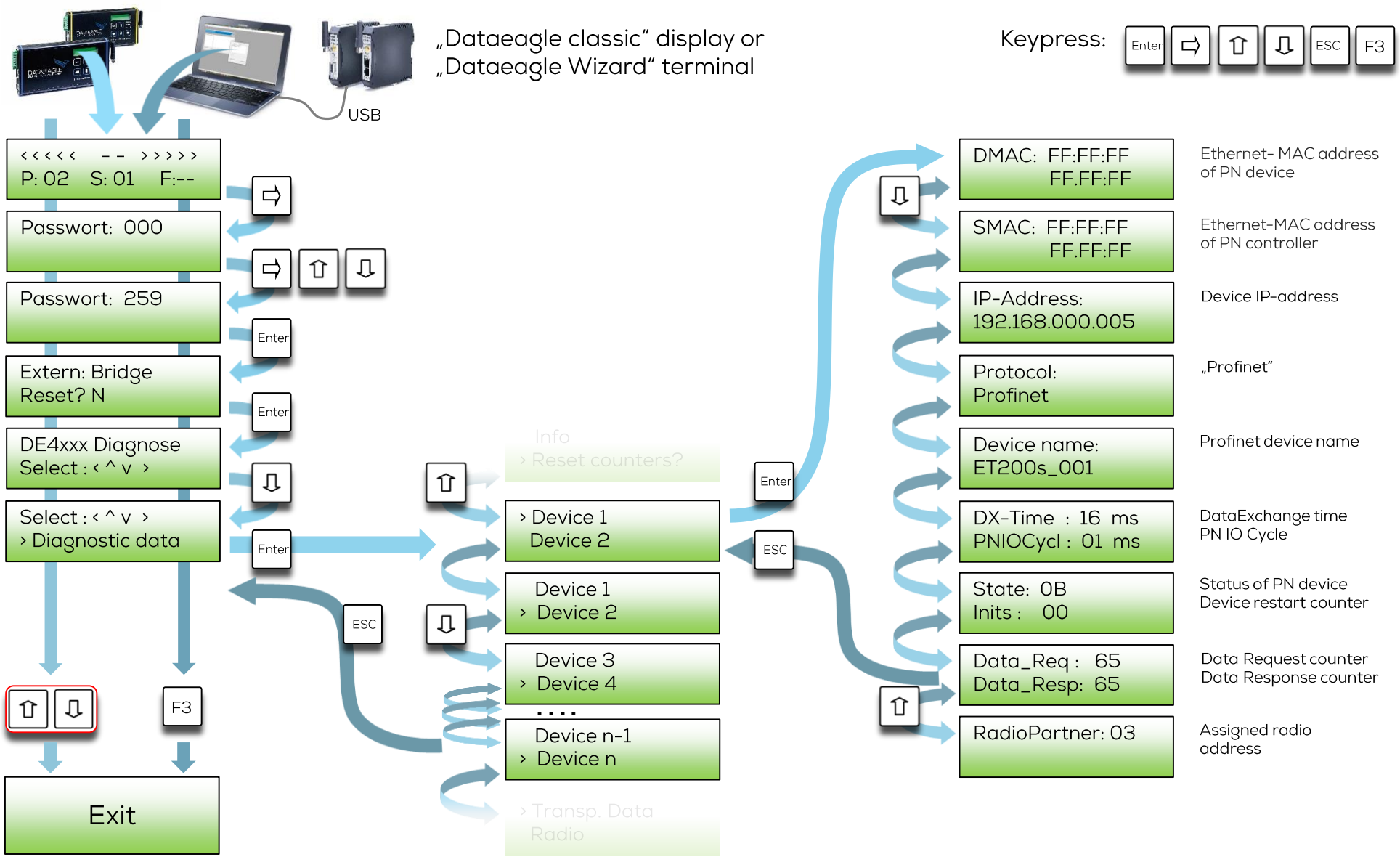

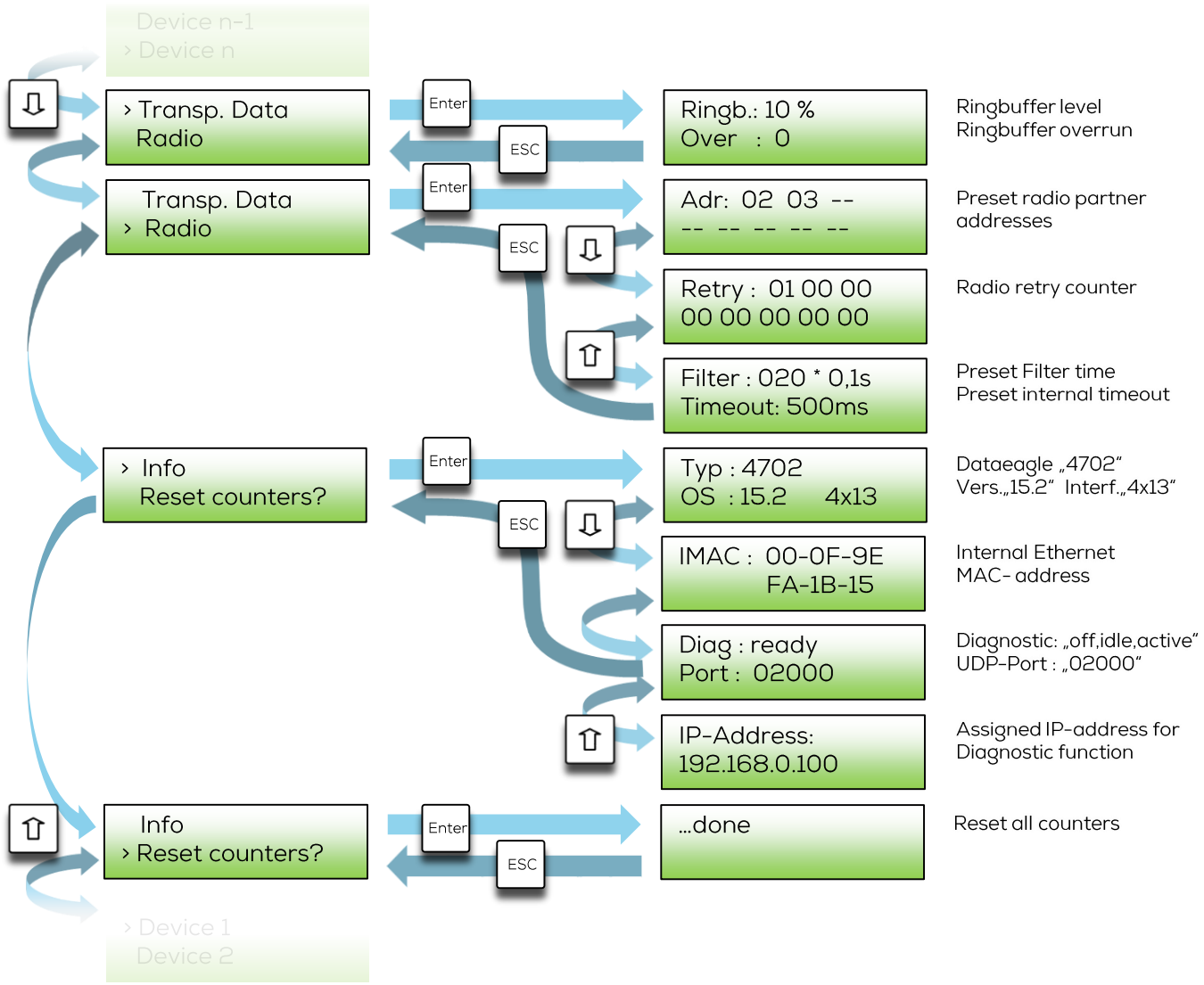
Device n-1
› Device n
› Transp. Data
Radio
Transp. Data
› Radio
› Info
Reset counters?
Info
› Reset counters?
› Device 1
Device 2
Enter
ESC
Ringb.: 10 %
Over : 0
Adr: 02 03 --
-- -- -- -- --
Retry : 01 00 00
00 00 00 00 00
Filter : 020 * 0,1s
Timeout: 500ms
Typ : 4702
OS : 15.2 4x13
IMAC : 00-0F-9E
FA-1B-15
Diag : ready
Port : 02000
IP-Address:
192.168.0.100
...done
Ringbuffer level
Ringbuffer overrun
Preset radio partner addresses
Radio retry counter
Preset Filter time
Preset internal timeout
Dataeagle „4702"
Vers.„15.2" Interf.„4x13"
Internal Ethernet MAC- address
Diagnostic: „off,idle,active"
UDP-Port : „02000"
Assigned IP-address for Diagnostic function
Reset all counters